INSTALLATION GUIDE - NOT ASSEMBLED

GROUND MOUNT POLE/STEM WITH Ø180mm/7" PLATE

Solar Bollard® EST. 2003
Smart by Design - Powered by Nature
Lighting

Congratulations on purchasing your

SBL2 / SBLV2 SERIES



Follow Link for
Online Warranty Registration
Warranty Submission Form

CONFIRM BEFORE YOU INSTALL

Note: Battery is pre-connected when supplied.

Confirm with the supplier of Solar Bollard Lighting® products prior to commencing installation, that a **"Project Location Design Assessment" (PLDA)** was undertaken and completed prior to delivery.

The **"PLDA"** applies a 'Power In vs. Power Out' design equation, based upon the geographical location's sunlight profile during winter solstice (longest night of the year), and other design factors including but not limited to:

- available Peak Sun Hours (PSH)
- varying shading levels across the project site
- seasonal, environmental, or other location dynamics:
  - snowfall
  - monsoonal rains
  - potential for flooding (submersion)
  - proximity to ocean

Once completed, the correct product series and power model for each specific installation point throughout the entire project site would have been accurately selected ensuring a minimum:

- 4+ nights battery autonomy (no solar input)
- solar co-efficient of >130%
- consistent illumination when lighting to your required compliant lighting code/standards

This will then ensure a fit-for-purpose, reliable, and long life-cycle lighting outcome is achieved.

AN INCORRECT POWER SELECTION WILL AFFECT WARRANTY TERM

Note:
If any variables as listed above are found at site of installation not discussed prior to delivery of your solar bollard light/s, **immediately contact your Solar Bollard Lighting® product supplier prior to commencing installation** to discuss any product changes that may be required to ensure operational parameters meet the Solar Bollard Lighting® Warranty T&C's.

© Key Wholesalers Pty Ltd t/a Solar Bollard Lighting- All rights reserved

INSTALLATION INSTRUCTIONS

BEFORE INSTALL: DIAL BEFORE YOU DIG

COMPONENTS NOT INCLUDED & REQUIRED FOR INSTALLATION OPTIONS BELOW:

- 3 x M12 (1/2") x 350mm/13.8" L-Bolt Anchors, or Wedge Anchors (Stud/Sleeve Anchors), Epoxy/Chemical Anchors, depending on mounting option to be utilized.
- 6 x M12 (1/2") x 24mm x 3mm Washers,
- 3 x M12 (1/2") x 22mm Spring Washer
- 3 x M12 (1/2") Nut/s + 3 x Security Nuts (Locking Nut)

INSTALL OPTION 1 - NEW CONCRETE

STEP 1 **CHECK SOIL TYPE FOR HOLE SIZE**

GOOD SOIL - 400mm/15.8" x 400mm/15.8" x 400mm/15.8" - 153kg once concrete added.

POOR SOIL - 400mm/15.8" x 500mm/19.7" x 400mm/15.8" -192kg once concrete added.

Poor Soil, taper base of hole outwards as per this image.

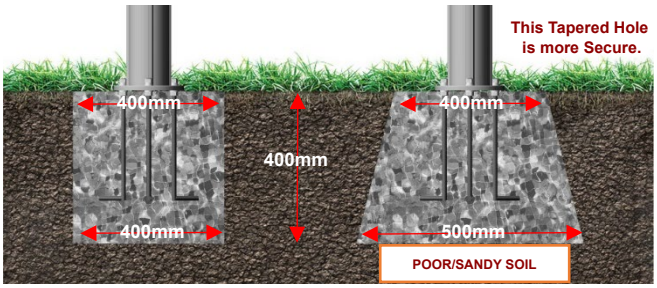

STEP 2 Attach L-Bolt Anchors to Base Plate.
L-BOLT ANCHOR ASSEMBLY INSTRUCTIONS

STEP 3 Fill hole with concrete

STEP 4 Insert pole/stem base with L-Bolt Anchors attached into concrete. Leave a 5mm gap between plate and concrete, so any water ingress can drain from the pole.

STEP 5 Use a digital or spirit level to ensure pole/stem is vertical by checking two pole/stem sides. Bracing if required can be used to stop movement and ensure pole/stem stays vertical whilst concrete sets.

INSTALL OPTION 2 - EXISTING CONCRETE

STEP 1 Check mounting surface is horizontal and level to ensure pole/stem is vertical once installed.

STEP 2 Mark out the 3-hole centre points with the base plate in place.

STEP 3 Drill/core 3 holes to take M12/1/2" Wedge/ Stud/Sleeve Anchors, or Epoxy/Chemical Anchors.

STEP 4 Install the securing device, ensuring **35mm (1.4") - 40mm (1.6") maximum** of thread protrudes above ground level.

STEP 5 Add pole/stem and adjust lower 3 nuts to level pole using a digital or spirit level to ensure pole/stem is vertical by checking two pole sides, and to allow any water ingress can drain from the pole. Ensure all nuts are tight and secure.

ASSEMBLED L-BOLT ANCHORS

NOTE: 350mm/13.8" L-BOLT ANCHORS NOT INCLUDED WITH ITEM

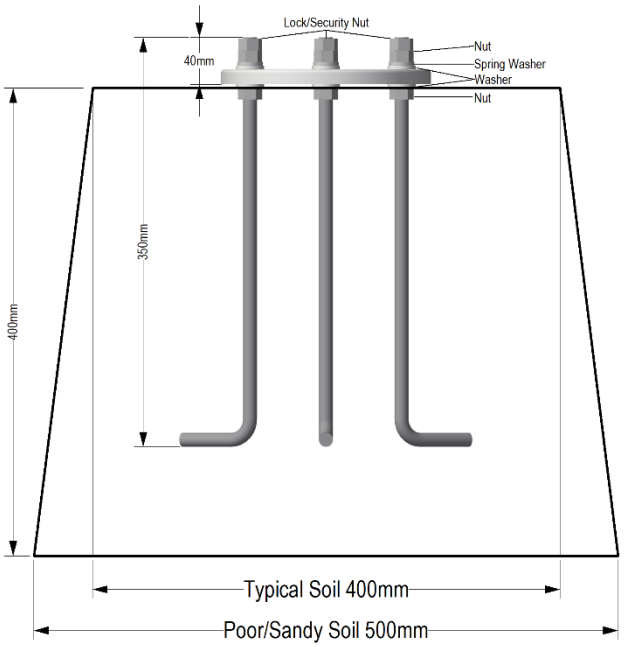

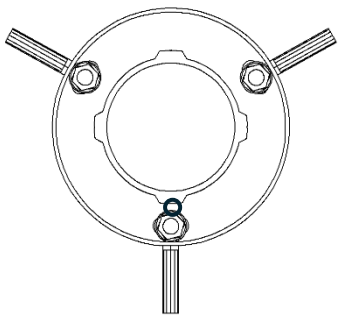



© Key Wholesalers Pty Ltd t/a Solar Bollard Lighting- All rights reserved

FOLLOW BELOW INSTRUCTIONS IF USING AN ASYMMETRICAL LIGHT

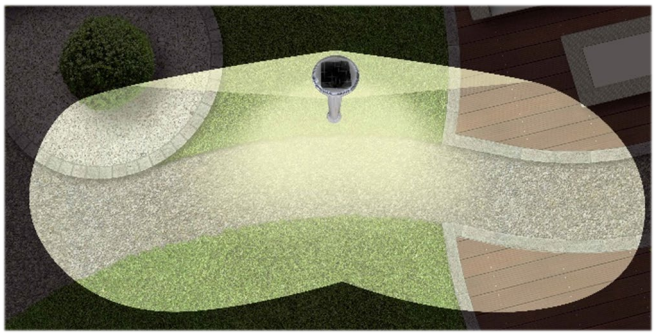

Above image shows actual centre position of luminaire to achieve even Asymmetrical Light Distribution.

To ensure even asymmetrical light distribution

- centre of luminaire LED chips must face directly across area to be lit.
- solarbollardlighting.com moulded into the top dome cover should always be left of centre when standing on the pathway.
- A **Red** ● will be applied to help centre alignment with the actual mounting hole.

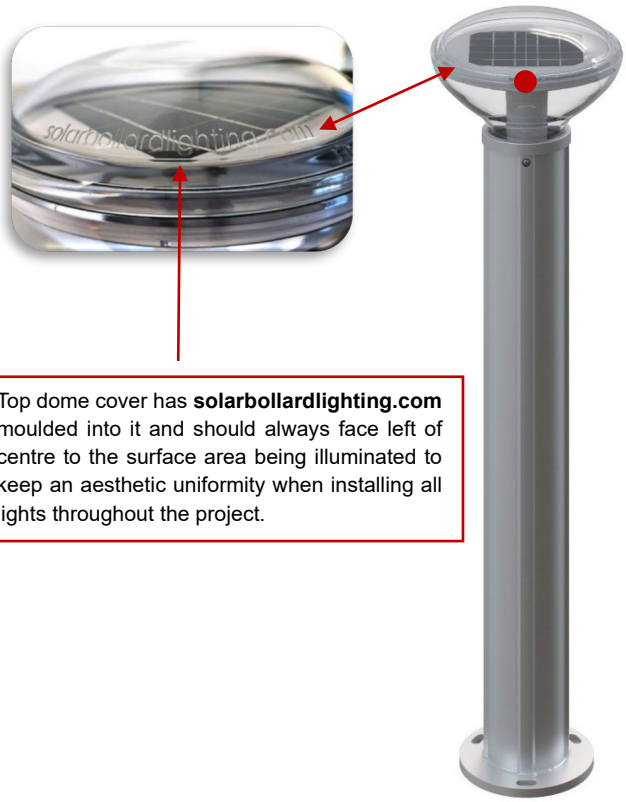

Top dome cover has **solarbollardlighting.com** moulded into it and should always face left of centre to the surface area being illuminated to keep an aesthetic uniformity when installing all lights throughout the project.

Remove all Red ● once positioning has been completed.

REMOVE DOME COVER WRAPPING FOR LIGHT TO ACTIVATE

BASE PLATE COVER INSTALL
(optional item)

FIX BASE PLATE COVER TO BASEPLATE

STEP 1 Add Sikaflex®-252 to 4 points on edge of mounting plate

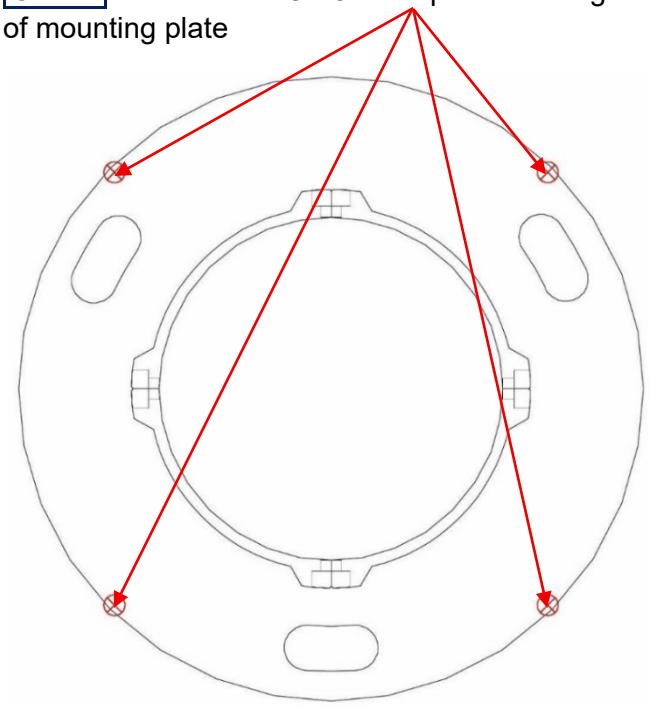

STEP 2 Add Base Plate Cover to pole/stem and carefully slide down pole/stem then push cover over ground mount plate until bottom edges align

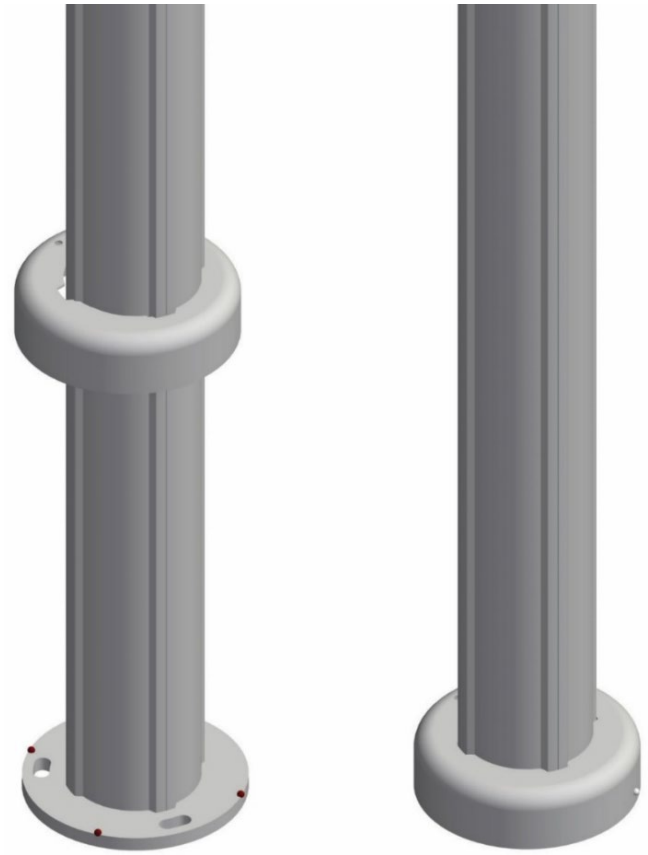

© Key Wholesalers Pty Ltd t/a Solar Bollard Lighting- All rights reserved

HOW TO SECURE SOLAR LIGHT TO POLE/STEM IF NOT ATTACHED

STEP 1 Install the solar light into the pole/stem pole until the solar light collar sits flush with the top edge of the pole/stem

STEP 2 Turn the solar light until internal threads have lined up horizontally with the counter bored holes in the pole/stem

STEP 3 Apply downward pressure to the top of the solar light dome to line up the thread vertically now.

This creates compression on the Spun Collar & O-Ring, creating a watertight seal

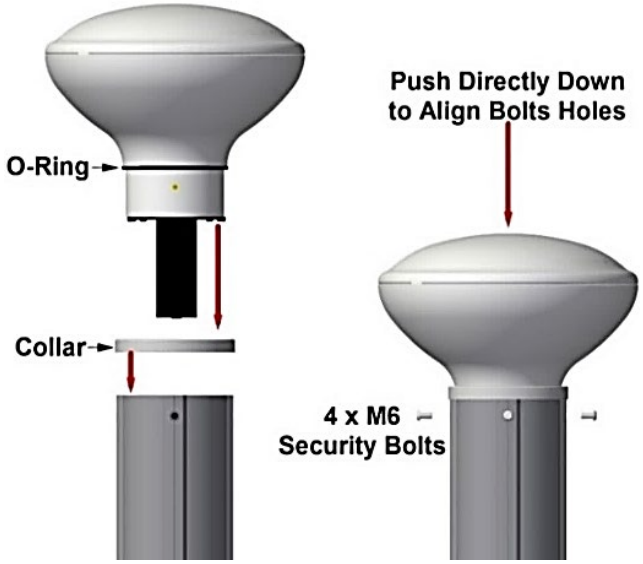

USING 2 PIN SECURITY DRIVER BIT
- MUST SIT FLAT TOGETHER -

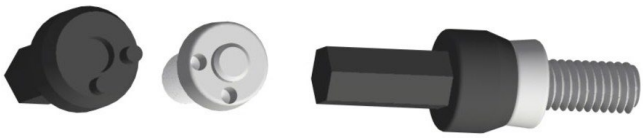

SECURITY FASTENERS MUST BE TENSIONED IN ORDER 1 - 2 – 3 - 4

STEP A - MUST BE COMPLETED BY HAND TENSION ONLY

STEP A Insert the M6 Security Fastener with the Security Driver Tool through the pole/stem into the internal thread and tension in order **1 to 4** by hand until the Security Fastener head is above the external pole/stem outer edge.

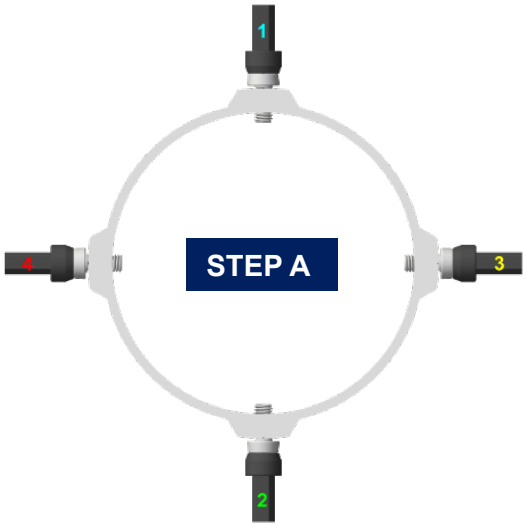

STEP B + STEP C
USE A POWERED VARIABLE SPEED TORQUE DRIVER TOOL

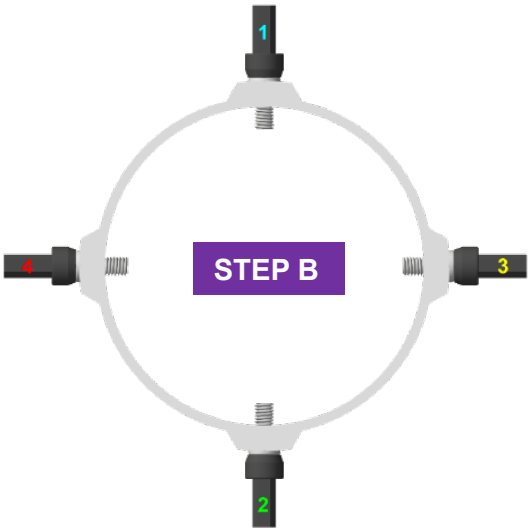

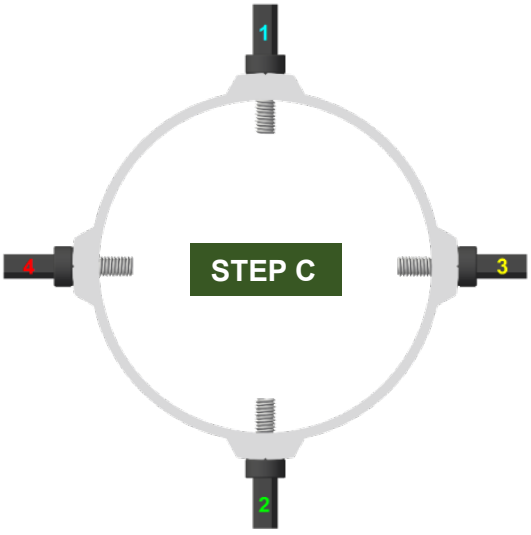

STEP D: ENSURE THIS IS COMPLETED

FINAL CHECK - tension by **HAND** to ensure the Security Fasteners are **TIGHT AND FIRM**.

- DO NOT OVERTIGHTEN –

© Key Wholesalers Pty Ltd t/a Solar Bollard Lighting- All rights reserved